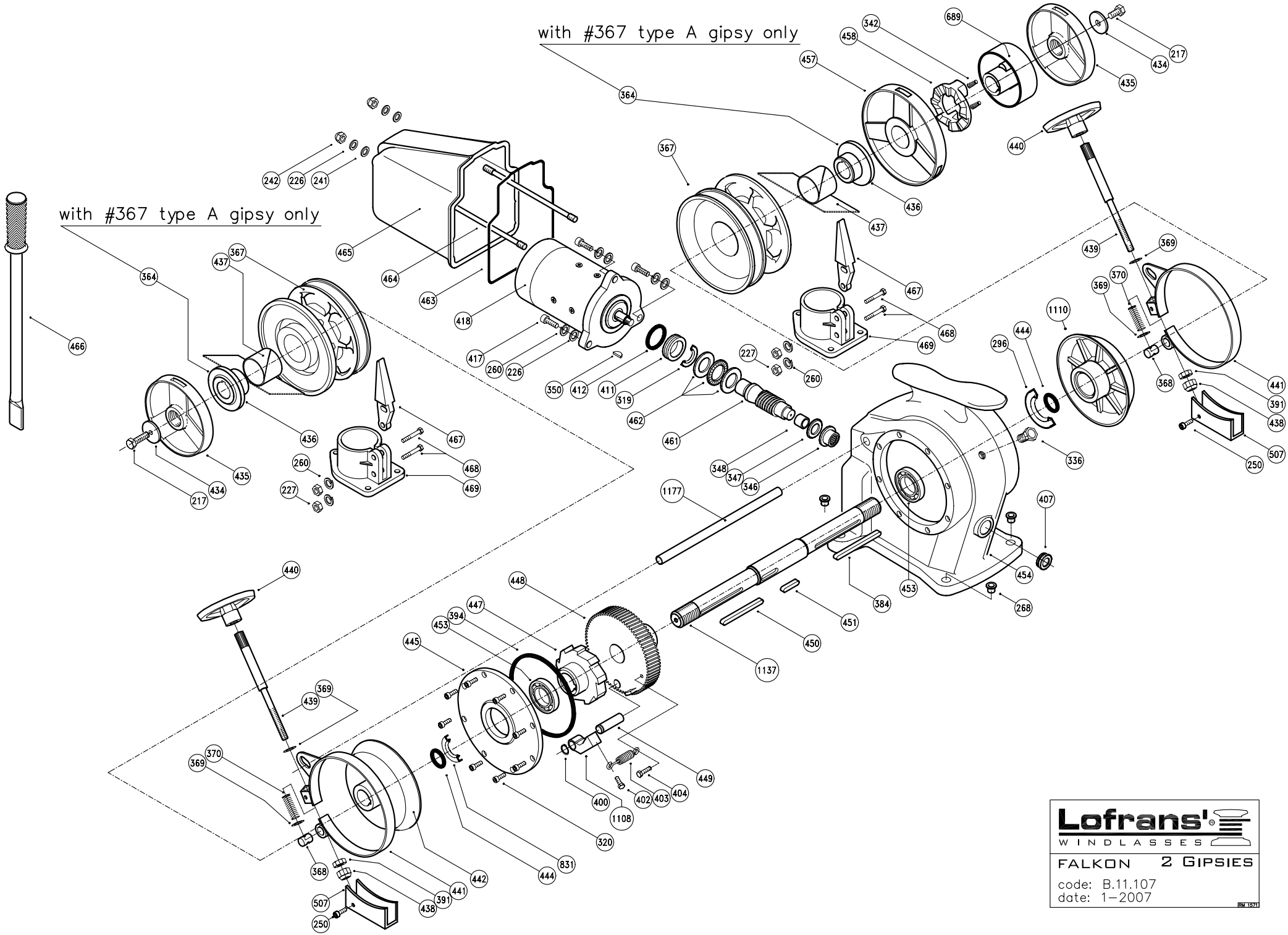

Lofrans'
WINDLASSES

FALKON 2 GIPSIES

code: B.11.107
date: 1–2007

RM 1571

FALKON - 2 GIPSIES

Item	Description	Kit	Q.ty
217	Hex hd screw M8x20	Kit B	2
226	Washer for screw M8	Kit B	5
227	Nut - M8	Kit B	4
241	Nylon washer M8	Kit B	2
242a	Cap nut M8	Kit B	2
250	Hd cap screw - M5x8	Kit B	2
260	Spring washer for screw M8	Kit B	7
268	Nylon bush		4
296	Seal - 40x56x8	Kit A	1
319	Seal - 25x42x6	Kit A	1
320	Hex hd screw M6x16	Kit B	8
336	Oil plug 3/8”		1
342	Spring		2
346	Combined bearing - Rax 720		1
347	Thrust ring - CP 32035		1
348	Ring IM 1520164		1
350	Round key 4x6,5	Kit C	1
364	Clutch cone - outer (for 367a gipsy only)		2
367a	Gipsy chain 8 Iso		2
367b	Gipsy chain 10 Iso - 3/8” G40		2
367c	Gipsy chain 3/8” Din766 - BBB - 10 Din766		2
367d	Gipsy chain 12 Iso - 13 Din766 - 1/2” Din766		2
367e	Gipsy chain 1/2” G40		2
367f	Gipsy chain 1/2” BBB		2
367g	Gipsy chain 14 Iso		2
367h	Gipsy chain 10 Iso		2
367i	Gipsy chain 3/8" G40		2
368	Pivot		2
369	Washer for screw M10	Kit B	4
370	Spring		2
384	Key 8x7x140	Kit C	1
391	Nut - M10	Kit B	2
394	O Ring seal - 4625	Kit A	1
400	Circlip - 15 Din 471	Kit D	1
402	Hex hd screw M6x16	Kit B	1
403	Spring		1
404	Hex hd screw M6x25	Kit B	1
407	Sightglass		1
411	Spacer		1
412	O Ring seal - 153	Kit A	1
417	Hd cap screw - M8x30	Kit B	3
418a	Electric motor 1200 W 12 V		1
418b	Electric motor 1200 W 24 V		1
418c	Electric motor 1500 W 12 V		1
418d	Electric motor 1500 W 24 V		1
434	Washer	Kit B	2
435	Wingnut		2
436	Clutch cone - outer		2
437a	Nylon band for chain Ø8		2
437c	Nylon band for chain Ø10		2
438	Safety nut M10	Kit B	2
439	Brake pivot		2
440	Hand-wheel		2
441	Band brake		2
442	Clutch cone - inner		1
444	O Ring seal - 4112	Kit A	2
445	Cover		1
447	Ratchet		1
448	Wormwheel		1
449	Pivot		1
450	Key 8x7x80	Kit C	2
451	Key - 10x8x40	Kit C	1
453	Bearing - 6206		2
454	Body		1
457	Emergency wheel		1
458	Dog clutch		1
461	Worm		1
462	Thrust bearing - 51106		1
463	Gasket		1
464	Stud - M8x285		2
465	Motor cover		1
466	Handle		1
467	Stripper		2
468	Hex hd screw M8x40	Kit B	4

Item	Description	Kit	Q.ty
469	Chain pipe		2
507a	Brake cover		2
689	Bush		1
831	Seal - 42x56x7	Kit A	1
1108	Pawl		1
1110	Clutch cone - inner		1
1137	Main shaft		1
1177	Brake pivot		1
KA11101	Kit A - Seals		1
KB11101	Kit B - Screw&Nuts		1
KC11102	Kit C - Keys		1
KD11101	Kit D - Circlips		1