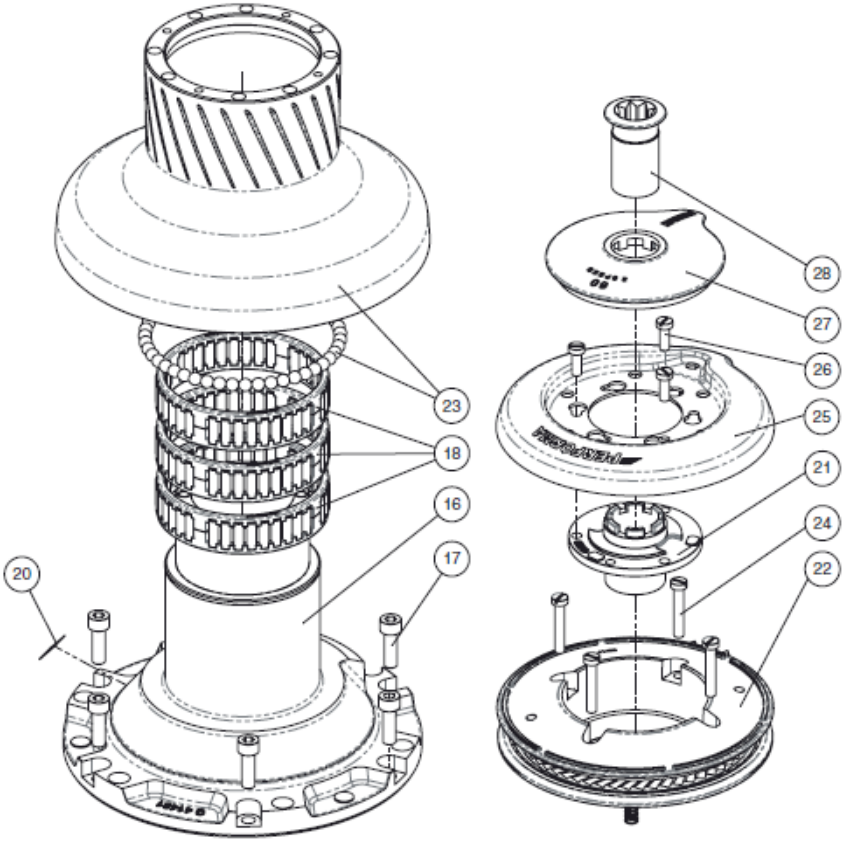
28
27
26
25
21
24
22
23
18
16
17
20

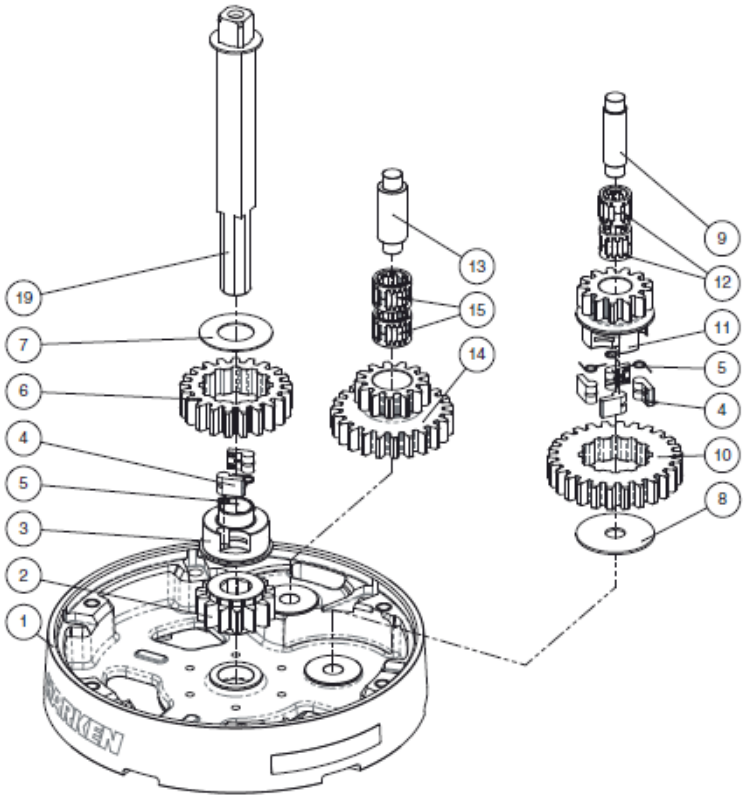
19
7
6
4
5
3
2
1
13
15
14
9
12
11
5
4
10
8
HARKEN

Performa Winch 60.2 STP

Pos	Q.ty	Code	Description
1	1	A96556000	Performa Assy Base W60
			W60 Performance Base
			Hell-coil M8x10
	1	S476030004	*Centering bushing Ø12*
	1	S415230A7	*Bushing Ø22xØ25x9.5*
	2	S415580085	*Bushing Ø12xØ35x9*
			*Winch Product Sticker***
2	1	S414400004	Gear Z14 W60
3	1	S413030004	Pawls Carrier Ø8xN2
4	6	S000090004	Pawl Ø8*
5	6	S000380001	Pawl Spring Ø8*
6	1	S414390041	Ratchet Gear Z21xN2
7	1	S413120002	Washer Ø22.5xØ45x1
8	1	S276170002	Washer Ø12.5xØ48x1.5
9	1	S281010004	Pin for gear
10	1	S414420041	Ratchet Gear Z26xN4
11	1	S414410004	Pawls Carrier Gear Z13 N4
12	2	A72821800	Roller Bearing Ø14xØ20x18
13	1	S416030004	Gear Pin Ø12xØ18x52,5
14	1	S414480004	Idler and Pinion Z23/Z13 W60
15	2	A74162300	Roller bearing Ø24xØ18x18
16	1	A94143100	Assy Housing Winch 60.2
			Housing W60
			Hell-coil M6x9
			Support Bushing W60
	2	S415580085	*Bushing Ø12xØ35x9*
	1	S4130900A7	*Bushing Ø22xØ25x9.5*

Pos	Q.ty	Code	Description
17	6	M0606303	Screw M8x25 UNI 5931
18	3	A74145000	Roller Bearing Ø95xØ107x26
19	1	A94143800	Assy Shaft Winch 60
			Central shaft W60 ST
	1	S413880002	*Washer Ø17.2xØ32x1.5*
20			Winch Serial Number Sticker
21	1	S4144300A0	Stripper Arm Housing W60/70
22	1	A96555900	Performa Assy Jaws W60
			Lower Jaw W60
			Upper Jaw W60
	1	S414850080	*Peeler W60 - 70*
	4	S683520001	*Molla d7 - d1 - L=30 mm*
23	1	A96537500	Spare kit drum Winch 60 Performa
			Performa Drum Assembly W60
	47	M0610280	*Ball 5/16"*
24	4	M0601803	Screw UNI EN ISO 1207:1996 - M6x35 - A4
25	1	S657410019	Performa Black Stripper Arm W60
26	3	M0601903	Screw M6x16 UNI1207
27	1	S416220081	Cover 2 Speed W60
28	1	A94136400	Assembly Socket W20-80
			Socket Handle W20/80
	1	S415130085	*Washer Ø7.7xØ25x5.8*
	1	M0614303	*Screw M8x20 UNI 6109*

**Available with service kit; see website www.harken.com*

***Winch product sticker*