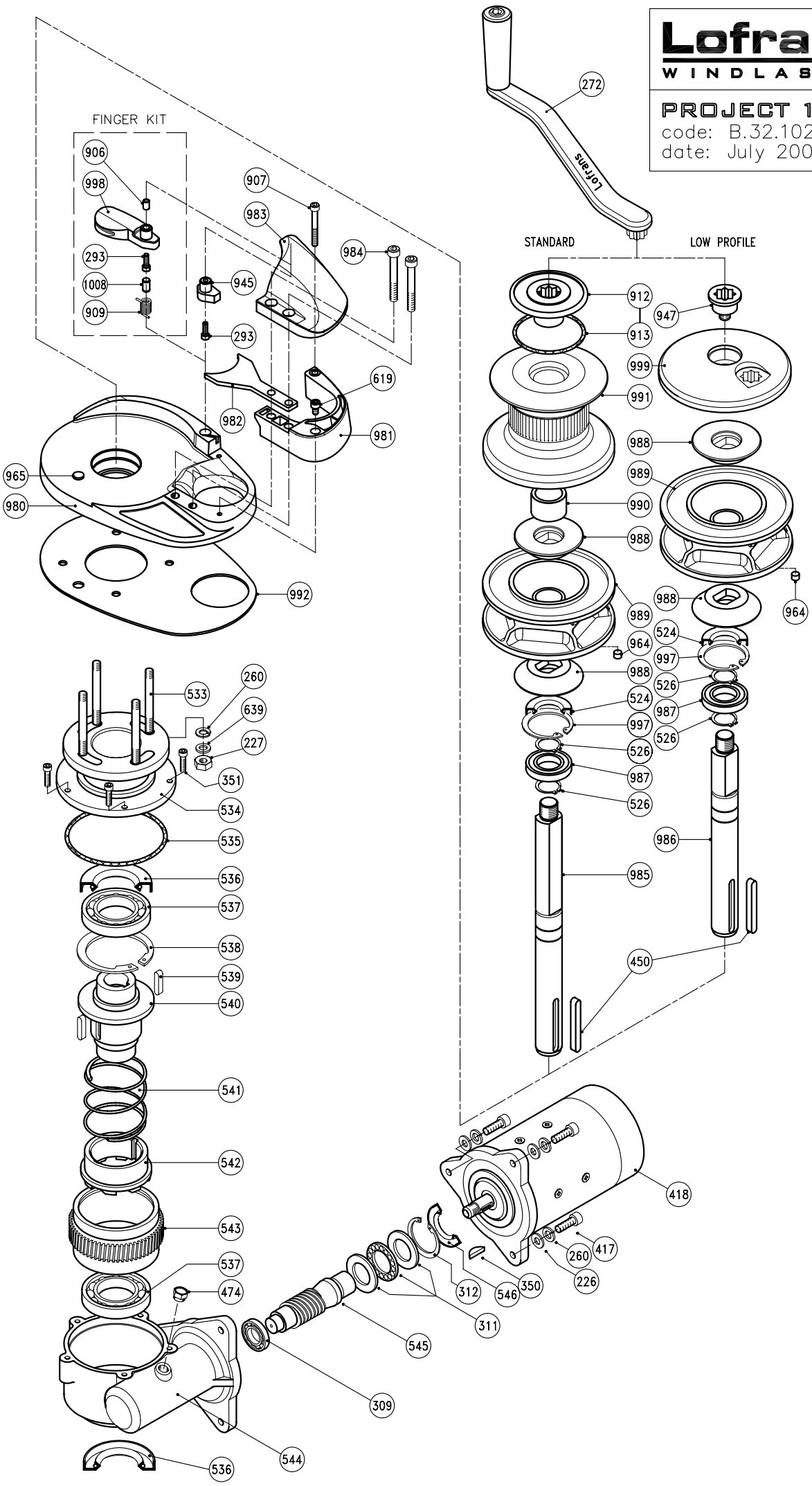
Lofrans'
WINDLASSES
PROJECT 1500 (USA)
code: B.32.102
date: July 2004
FINGER KIT
STANDARD
LOW PROFILE
272
906
998
907
983
984
293
1008
909
945
293
619
982
981
965
980
992
912
913
947
999
991
988
989
990
988
989
988
964
964
524
997
526
987
526
524
997
526
987
526
986
985
450
418
417
260
226
350
546
312
311
545
309
544
536
533
260
639
227
351
534
535
536
537
538
539
540
541
542
543
537
474

PROJECT 1500 (USA)

Item	Description	Kit	Q.ty
226	Washer for screw M8	Kit B	3
227	Nut - M8	Kit B	6
260	Spring washer for screw M8	Kit B	7
272	Handle		1
293	Hd cap screw - M5x16	Kit B	1
309	Bearing - 6203		1
311	Thrust bearing - 51105		1
312	Circlip - 43 Din 472	Kit D	1
350	Round key - 4x6,5	Kit C	1
351	Hd cap screw - M6x20	Kit B	6
417	Hex hd screw - M8x30	Kit B	3
418a	Electric motor 1200W 12V		1
418b	Electric motor 1200W 24V		1
418c	Electric motor 1500W 12V		1
418d	Electric motor 1500W 24V		1
450	Key - 8x7x80	Kit C	1
474	Oil plug 1/4"		1
524	Seal - 30x55x10	Kit A	1
526	Circlip - 30 DIN 471	Kit D	2
533a	Stud - M8x110		4
534	Gearcase - upper		1
535	O Ring - 4500	Kit A	1
536	Seal - 45x60x7	Kit A	2
537	Bearing - 16009		2
538	Circlip - 100 DIN 472	Kit D	1
539	Key - 8x7x35	Kit C	2
540	Sleeve		1
541	Spring		1
542	Dog clutch		1
543	Wormwheel		1
544	Gearcase - lower		1
545	Worm		1
546	Seal - 25x45x10	Kit A	1
619	Hd cap screw - M6x10	Kit B	1
639	Washer for screw M8	Kit B	6
906	Spacer		1
907	Hd cap screw - M6x50	Kit B	1
909	Spring		1
912	Clutch nut		1
913	O Ring - 3287	Kit A	1
945	Cap		1
947	Lock nut		1
964	Magnet		1
965	Sensor		1
980a	Base		1
981	Support		1
982	Stripper		1
983a	Cover		1
984	Hd cap screw - M8x50	Kit B	2
985	Std main shaft		1
986	LP main shaft		1
987	Stainless steel bearing - 6006 2RS		1
988	Clutch cone		2
989a	Gipsy ∅8 Iso		1
989b	Gipsy ∅10 Iso - ∅3/8" G40		1
989c	Gipsy ∅10 Din766		1
989d	Gipsy ∅12 Iso-∅13 Din766		1
990	Spacer		1
991a	Drum		1
992	Gasket		1
997	Circlip - 55 DIN 472	Kit D	1
998	Finger		1
999a	Gipsy cap		1
1008	Pivot 8x14		1

Item	Description	Kit	Q.ty
KA32101	Kit A - Seals		1
KB32101	Kit B - Screw&Nuts		1
KC32101	Kit C - Keys		1
KD32101	Kit D - Circlips		1