Lofrans'®
WINDLASSES

TITAN - B

code: B.12.102 Rev. A
date: 01–2005

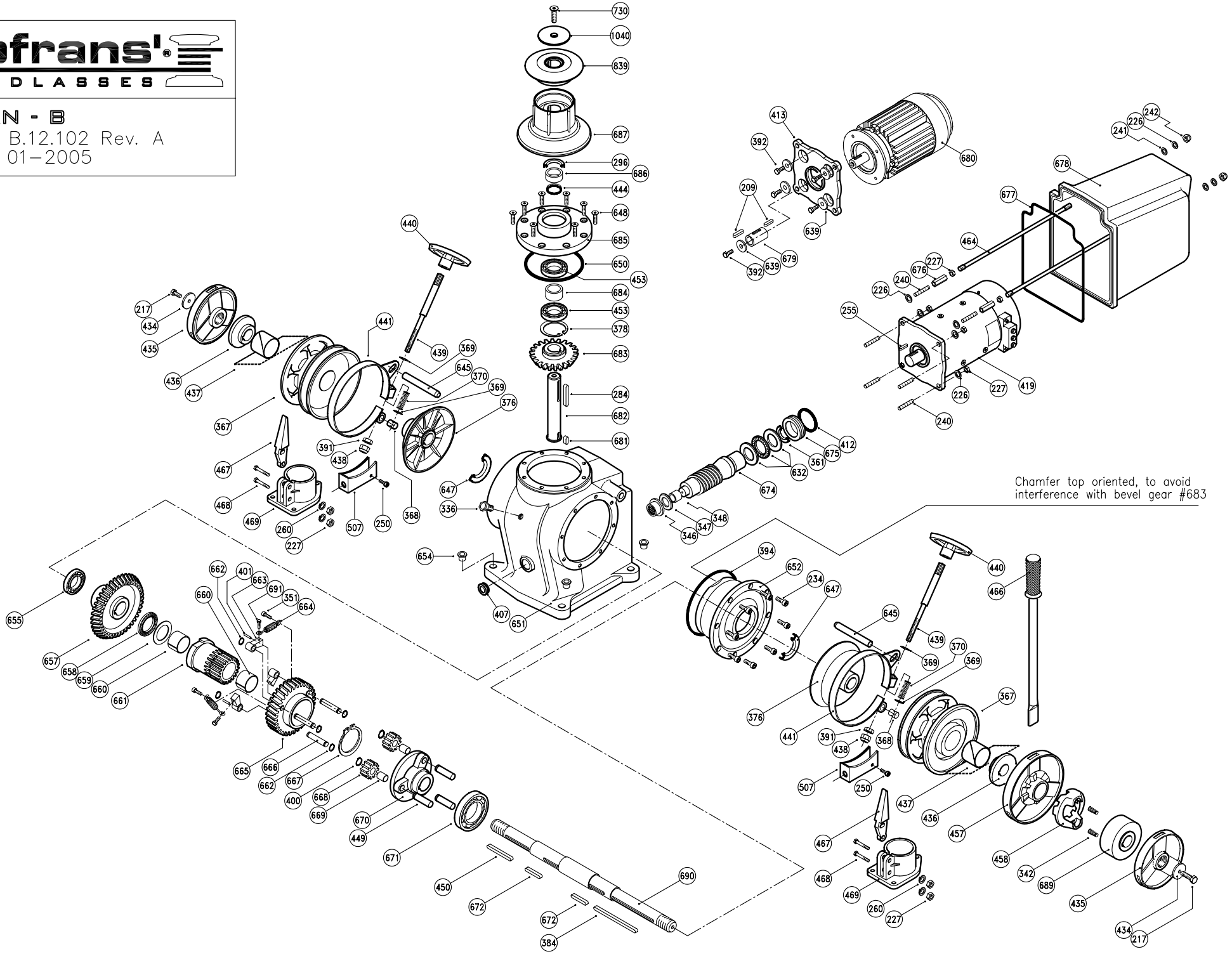

TITAN - B

Item	Description	Kit	Q.ty
209	Key - 6x6x30	Kit C	2
217	Hex hd screw M8x20	Kit B	2
226	Washer for screw M8	Kit B	8
227	Nut - M8	Kit B	10
234	Hd cap screw - M8x20	Kit B	8
240	Stud - M8x45		6
241	Nylon washer M8	Kit B	2
242a	Cap nut M8	Kit B	2
250	Hd cap screw - M5x8	Kit B	2
255	Key - 6x6x25	Kit C	1
260	Spring washer for screw M8	Kit B	4
284	Key - 8x7x60	Kit C	1
296	Seal - 40x56x8	Kit A	1
336	Oil plug 3/8”		1
342	Spring		2
346	Combined bearing - Rax 720		1
347	Thrust ring - CP 32035		1
348	Ring IM 1520164		1
351	Hd cap screw - M6x20	Kit B	3
361	Seal - 40x50x5	Kit A	1
367a	Gipsy chain 8 Iso		2
367b	Gipsy chain 10 Iso - 3/8” G40		2
367c	Gipsy chain 3/8” Din766 - BBB - 10 Din766		2
367d	Gipsy chain 12 Iso - 13 Din766 - 1/2” Din766		2
367e	Gipsy chain 1/2” G40		2
367f	Gipsy chain 1/2” BBB		2
367g	Gipsy chain 14 Iso		2
367h	Gipsy chain 10 Iso		2
367i	Gipsy chain 3/8" G40		2
368	Pivot		2
369	Washer for screw M10	Kit B	4
370	Spring		2
376	Clutch cone - inner		2
378	Circlip - 62 Din 472	Kit D	1
384	Key - 8x7x140	Kit C	1
391	Nut - M10	Kit B	2
392	Hex hd screw M8x25	Kit B	5
394	O Ring seal - 4625	Kit A	1
400	Circlip - 15 Din 471	Kit D	3
401	Pivot		3
407	Sightglass		1
412	O Ring seal - 153	Kit A	1
413	Coupling flange		1
419	Electric motor 2000W 24V		1
434	Washer	Kit B	2
435	Wingnut		2
436	Clutch cone - outer		2
437a	Nylon band for chain Ø8		2
437c	Nylon band for chain Ø10		2
438	Safety nut M10	Kit B	2
439	Brake pivot		2
440	Hand-wheel		2
441	Band brake		2
444	O Ring seal - 4112	Kit A	1
449	Pivot		3
450	Key - 8x7x80	Kit C	1
453	Bearing - 6206		2
457	Emergency wheel		1
458	Dog clutch		1
464	Stud - M8x285		2
466	Handle		1
467	Stripper		2
468	Hex hd screw M8x40	Kit B	4
469	Chain pipe		2
507a	Brake cover		2
632b	Thrust bearing - 51108		1
639	Washer for screw M8	Kit B	5
645	Brake pivot		2
647	Seal - 35x65x10	Kit A	2
648	Hd cap screw - M8x20	Kit B	8
650	Gasket		1
651	Body		1
652	Rack		1
654	Nylon bush		4
655	Bearing - 6207		1

Item	Description	Kit	Q.ty
657	Bevel gear		1
658	Thrust bearing - AX 4060		1
659	Thrust ring - CP 4060		1
660	Bush		2
661	Ratchet wheel		1
662	Circlip - 12 Din 471	Kit D	6
663	Pawl		3
664	Spring		3
665	Wormwheel		1
666	Pivot		3
667	Circlip - 68 Din 471	Kit D	1
668	Gear		3
669	Bush		3
670	Gear flange		1
671	Bearing - 6011		1
672	Key - 8x7x50	Kit C	2
674	Worm		1
675	Spacer		1
676	Spacer		2
677	Gasket		1
678a	Motor cover		1
678b	White motor cover		1
679	Coupling		1
680	A.C. Electric motor		1
681	Key - 8x7x20	Kit C	1
682	Shaft		1
683	Bevel gear		1
684	Spacer		1
685	Cover		1
686	Spacer		1
687	Chromed bronze drum-lower part		1
689	Bush		1
690	Main shaft		1
691	Hd cap screw - M5x12	Kit B	3
730	Conic hd screw M10x30	Kit B	1
839a	Chromed bronze drum-upper part		1
1040	Washer		1
KA12101	Kit A - Seals		1
KB12101	Kit B - Screw&Nuts		1
KC12101	Kit C - Keys		1
KD12101	Kit D - Circlips		1